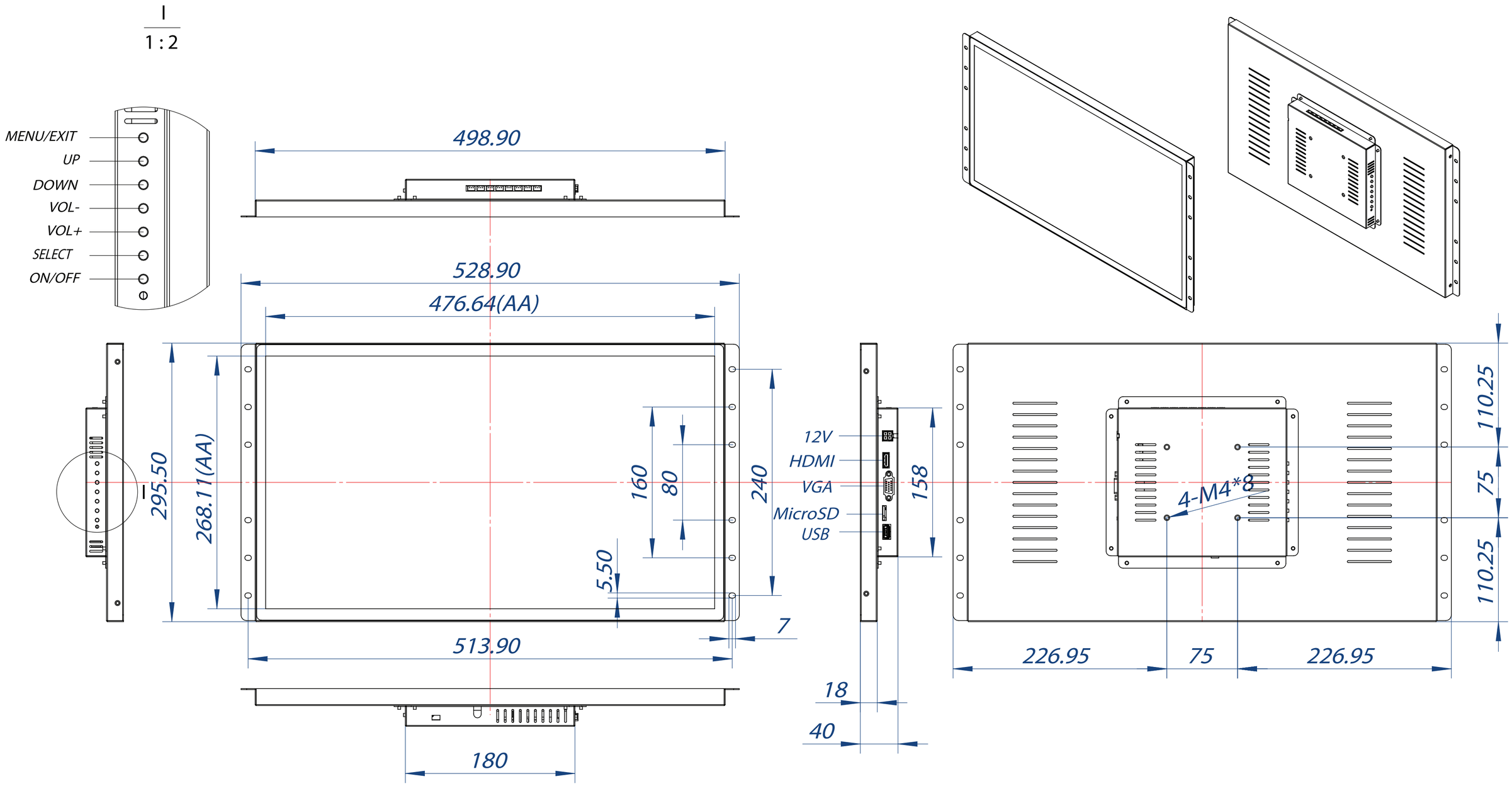

21.5” Touch Dual Function: Ad Player / LCD Monitor

20-3002-1037 V2.0 | PCBA 2.1 | V Series | 2018.06.29

bluefin Custom LCD Solutions
www.thebluefin.com | sales@thebluefin.com | 866.905.6400